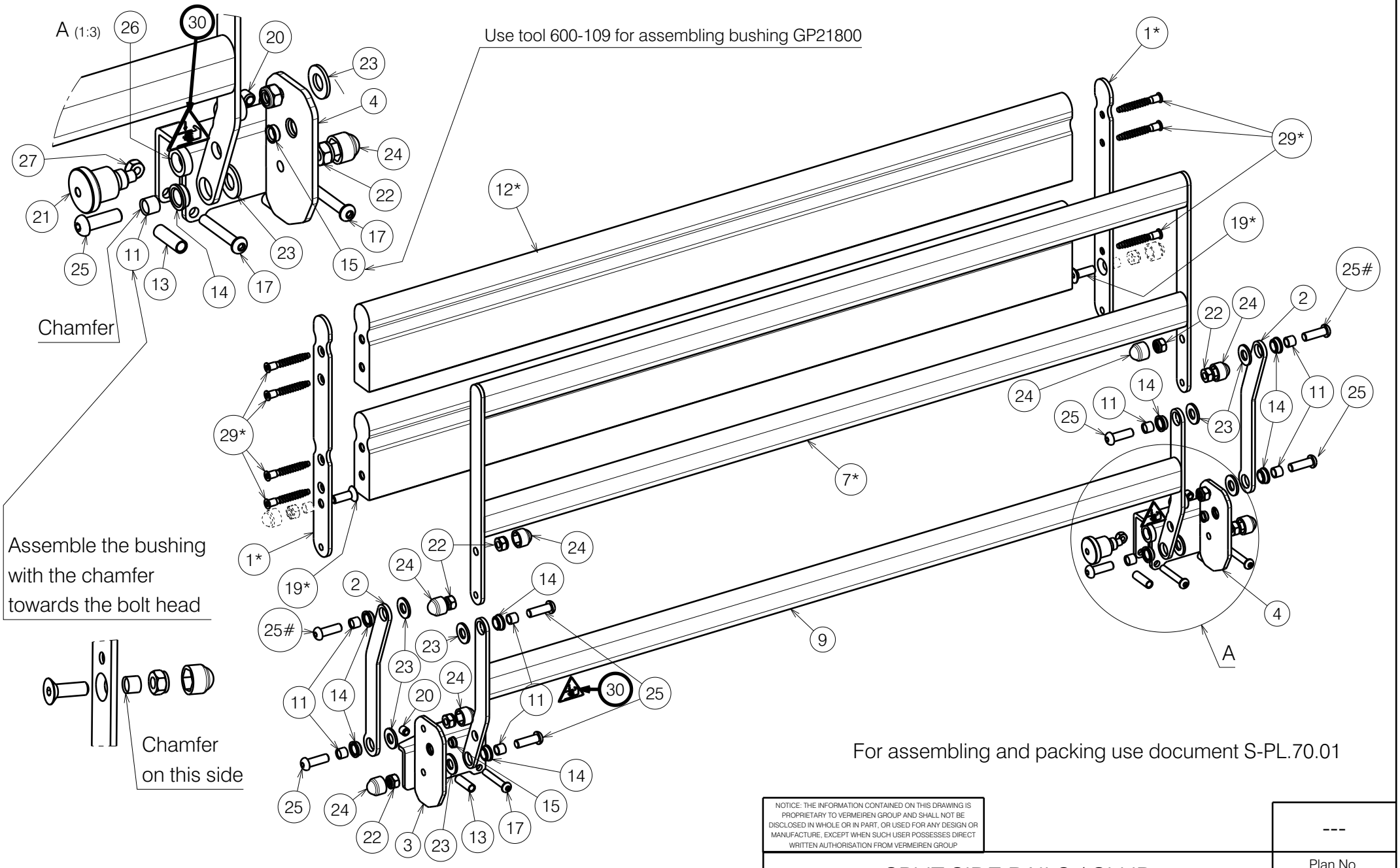

For assembling and packing use document S-PL.70.01

* - depends on option

\# - don't use with wooden rails

Right headside depicted

NOTICE: THE INFORMATION CONTAINED ON THIS DRAWING IS PROPRIETARY TO VERMEIREN GROUP AND SHALL NOT BE DISCLOSED IN WHOLE OR IN PART, OR USED FOR ANY DESIGN OR MANUFACTURE, EXCEPT WHEN SUCH USER POSSESSES DIRECT WRITTEN AUTHORISATION FROM VERMEIREN GROUP

SPLIT SIDE RAILS / CLUB

1/3

Plan No. E00051321/H_1.1

Scale: 1:5	Drafted	Verified	Confirmed
Date	06/02/2023	2/10/2026	2/10/2026
Initials	OY	PM	AZ

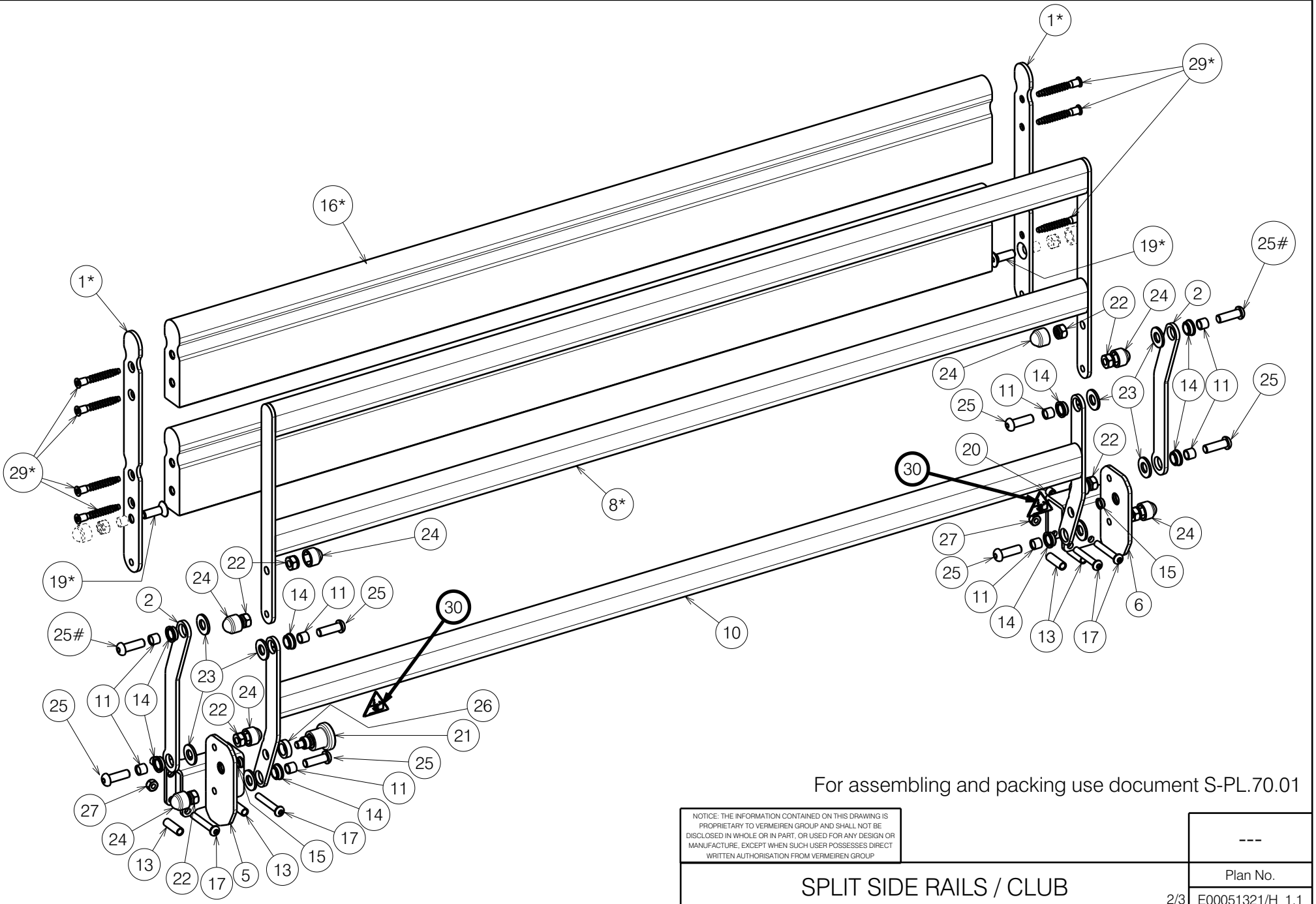

For assembling and packing use document S-PL.70.01

* - depends on option

- don't use with wooden rails
Right footside depicted

NOTICE: THE INFORMATION CONTAINED ON THIS DRAWING IS PROPRIETARY TO VERMEIREN GROUP AND SHALL NOT BE DISCLOSED IN WHOLE OR IN PART, OR USED FOR ANY DESIGN OR MANUFACTURE, EXCEPT WHEN SUCH USER POSSESSES DIRECT WRITTEN AUTHORISATION FROM VERMEIREN GROUP.

SPLIT SIDE RAILS / CLUB				Plan No.
				2/3 E00051321/H_1.1
Scale: 1:5	Drafted	Verified	Confirmed	VERMEIREN
Date	06/02/2023	2/10/2026	2/10/2026	
Initials	OY	PM	AZ	

No.	Plan	Article	Qty
1*	YP08012	2606837	8
2	YP07990	2603837	8
3	P00051323	2672037 (L)	1
	P00051324	2672137 (R)	1
4	YP08015	2604137 (L)	1
	YP08016	2604237 (R)	1
5	YP08017	2604337 (L)	1
	YP08018	2604437 (R)	1
6	YP08628	2623537 (L)	1
	YP08629	2623637 (R)	1
7*	YP08630	2623737	2
8*	YP08631	2623837	2
9	YP08632	2623937	2
10	YP08633	2624037	2
11	XP03050	GP23100	32
12*	XP03134	HP00680	4
13	XP03116	GP24700	14
14	XP02893	2994748	32
15	XP02894	GP21800	8
16*	XP03135	HP00681	4
17	M6x40 ISO7380	1006111	14
18	---	---	---
19*	M8x25 DIN7991	1995598	8
20	M8x8 DIN916/45H	2996665	8
21	Blocker Pin M12	2994540	4
22	M8 DIN985	1001682	32
23	D21 DIN125	1001557	32
24	Nut Cap M8 Grey	2994898	32

No.	Plan	Article	Qty
25	M8x25 ISO7380	1990501	32/24*
26	XP03232	GP26300	4
27	M6 DIN985	1001680	14
28**	XP03129	U000430	1
29*	D7x50	2999413	32
30	Sticker	T001090	8

* - depends on option

** - not depicted

For assembling and packing use document S-PL.70.01

NOTICE: THE INFORMATION CONTAINED ON THIS DRAWING IS PROPRIETARY TO VERMEIREN GROUP AND SHALL NOT BE DISCLOSED IN WHOLE OR IN PART, OR USED FOR ANY DESIGN OR MANUFACTURE, EXCEPT WHEN SUCH USER POSSESSES DIRECT WRITTEN AUTHORISATION FROM VERMEIREN GROUP

SPLIT SIDE RAILS / CLUB

3/3

Plan No. E00051321/H_1.1

Scale: 1:5	Drafted	Verified	Confirmed
Date	06/02/2023	2/10/2026	2/10/2026
Initials	OY	PM	AZ

VERMEIREN