HEADSIDE MODULE

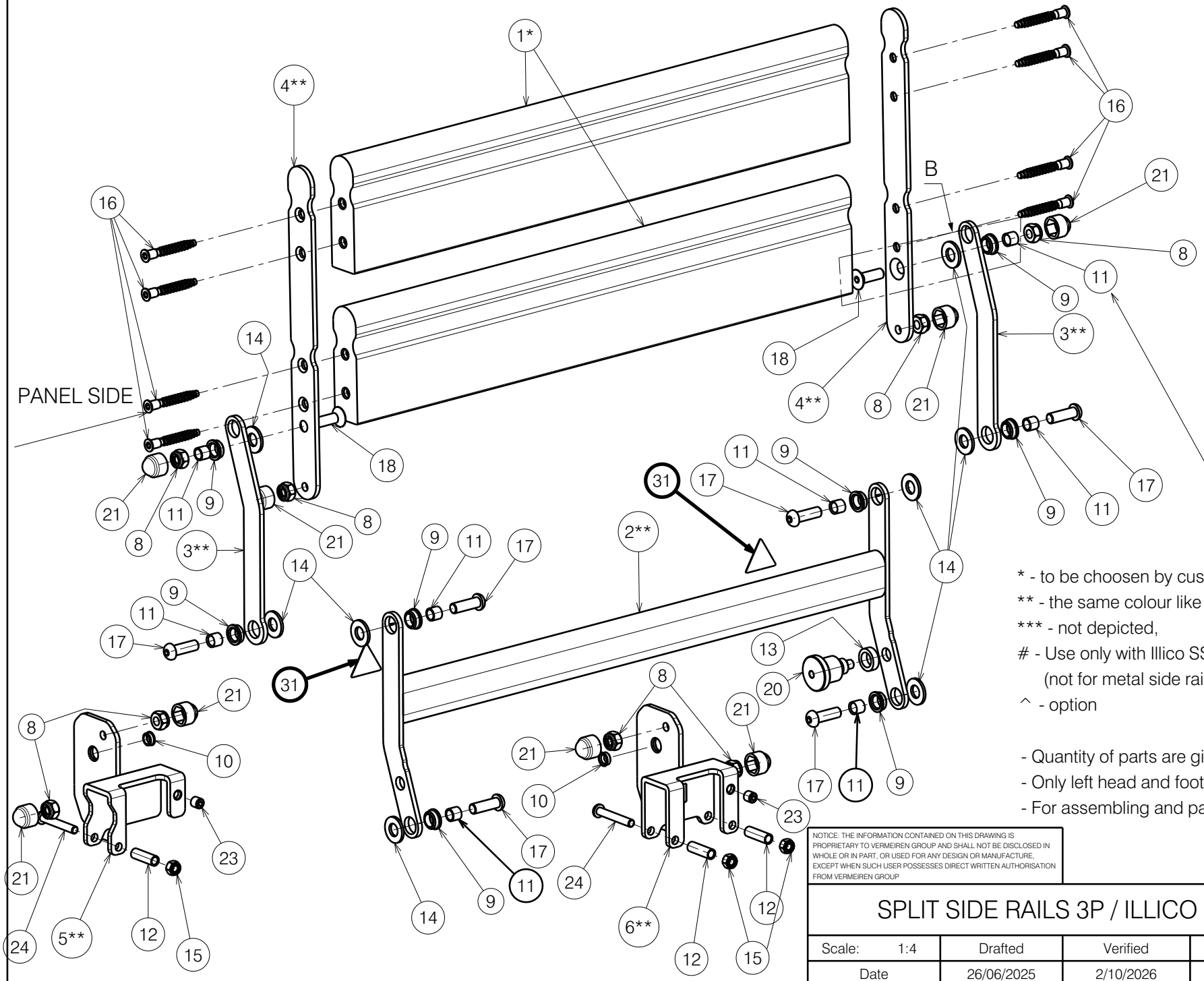

B (1:3)

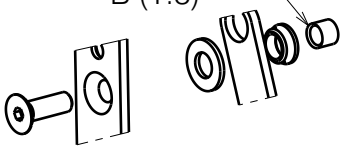

Assemble the bushing with the chamfer towards the bolt head

* - to be choosen by customer,
** - the same colour like ordered bed,
*** - not depicted,
# - Use only with Illico SSR. 3SSR, wooden side rails (not for metal side rails).
^ - option

- Quantity of parts are given for set (left and right side),
- Only left head and footsides depicted,
- For assembling and packing use document S-PL.70.01.

NOTICE: THE INFORMATION CONTAINED ON THIS DRAWING IS PROPRIETARY TO VERMEIREN GROUP AND SHALL NOT BE DISCLOSED IN WHOLE OR IN PART, OR USED FOR ANY DESIGN OR MANUFACTURE, EXCEPT WHEN SUCH USER POSSESSES DIRECT WRITTEN AUTHORISATION FROM VERMEIREN GROUP

1/4

SPLIT SIDE RAILS 3P / ILLICO 3SSR

Plan No. E00108327/G.1

Scale: 1:4	Drafted	Verified	Confirmed
Date	26/06/2025	2/10/2026	2/10/2026
Initials	AK	PM	AZ

VERMEIREN

* - to be choosen by customer,
** - the same colour like ordered bed,
*** - not depicted,
# - Use only with Illico SSR. 3SSR, wooden side rails
(not for metal side rails).
^ - option

- Quantity of parts are given for set (left and right side),
- Only left head and footsides depicted,
- For assembling and packing use document S-PL.70.01.

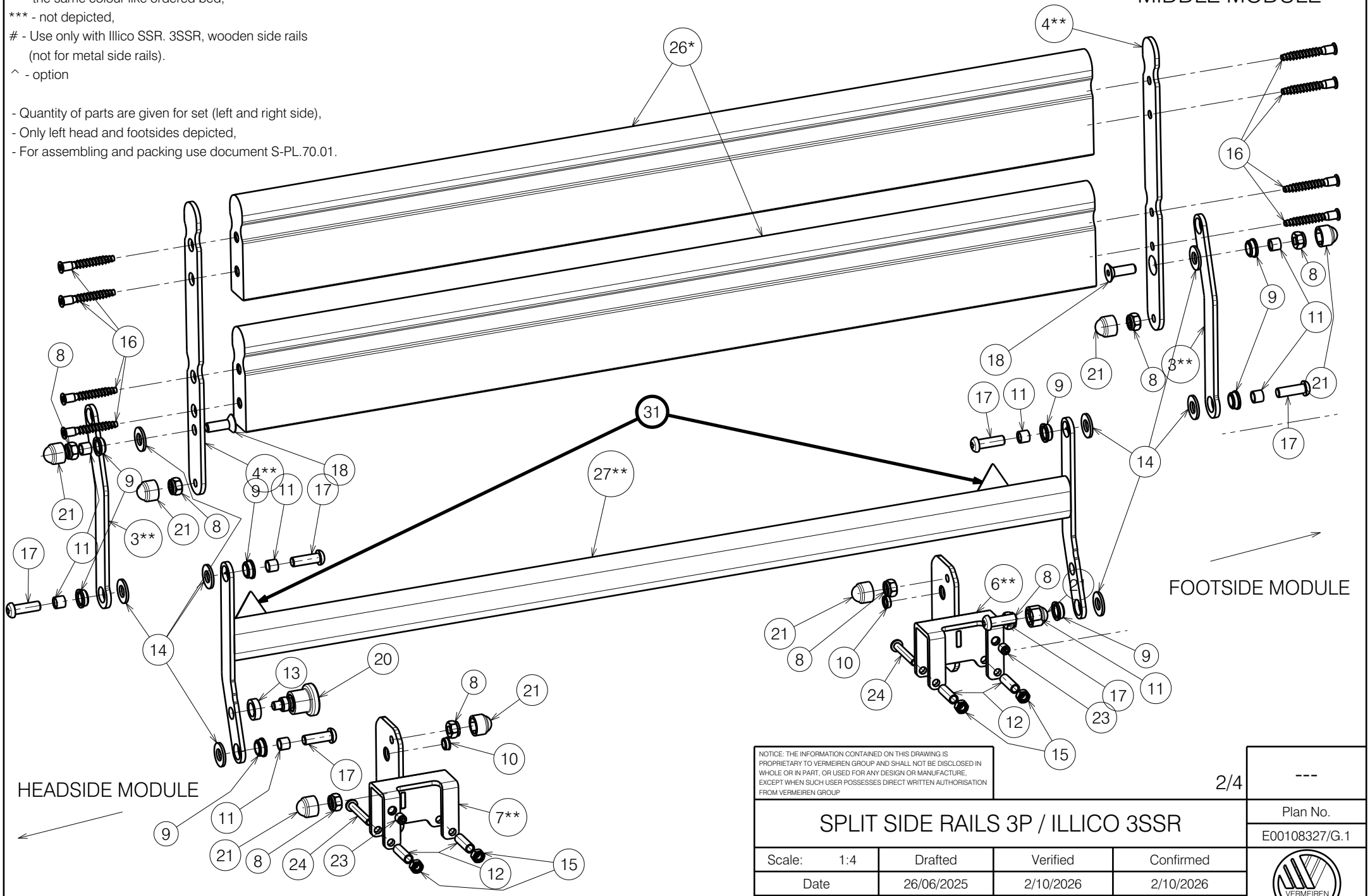

NOTICE: THE INFORMATION CONTAINED ON THIS DRAWING IS PROPRIETARY TO VERMEIREN GROUP AND SHALL NOT BE DISCLOSED IN WHOLE OR IN PART, OR USED FOR ANY DESIGN OR MANUFACTURE, EXCEPT WHEN SUCH USER POSSESSES DIRECT WRITTEN AUTHORISATION FROM VERMEIREN GROUP

2/4

SPLIT SIDE RAILS 3P / ILLICO 3SSR

Plan No.
E00108327/G.1

Scale: 1:4	Drafted	Verified	Confirmed
Date	26/06/2025	2/10/2026	2/10/2026
Initials	AK	PM	AZ

VERMEIREN

FOOTSIDE MODULE

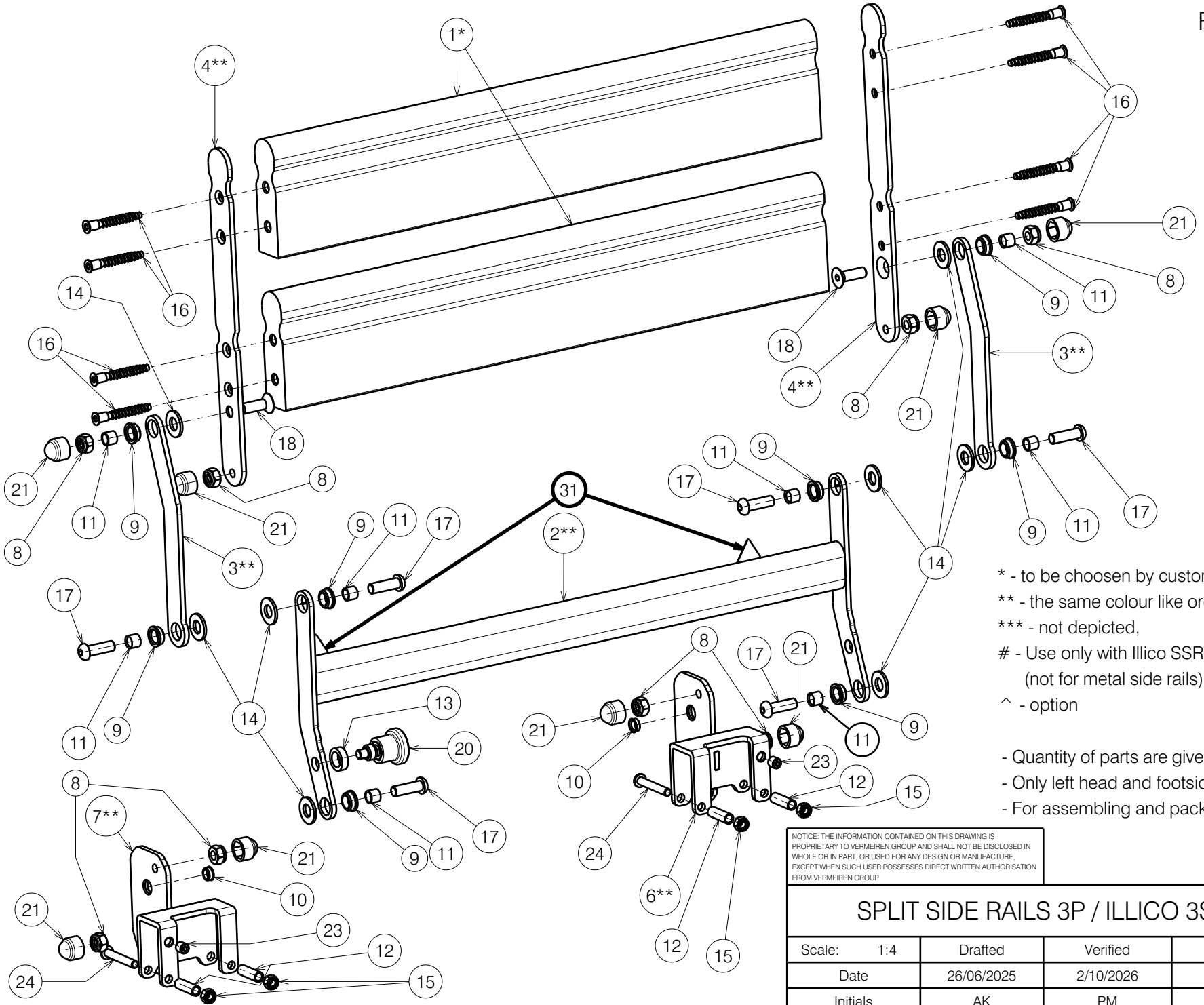

NOTICE: THE INFORMATION CONTAINED ON THIS DRAWING IS PROPRIETARY TO VERMEIREN GROUP AND SHALL NOT BE DISCLOSED IN WHOLE OR IN PART, OR USED FOR ANY DESIGN OR MANUFACTURE, EXCEPT WHEN SUCH USER POSSESSES DIRECT WRITTEN AUTHORISATION FROM VERMEIREN GROUP

3/4

SPLIT SIDE RAILS 3P / ILLICO 3SSR

Plan No. E00108327/G.1

Scale: 1:4	Drafted	Verified	Confirmed
Date	26/06/2025	2/10/2026	2/10/2026
Initials	AK	PM	AZ

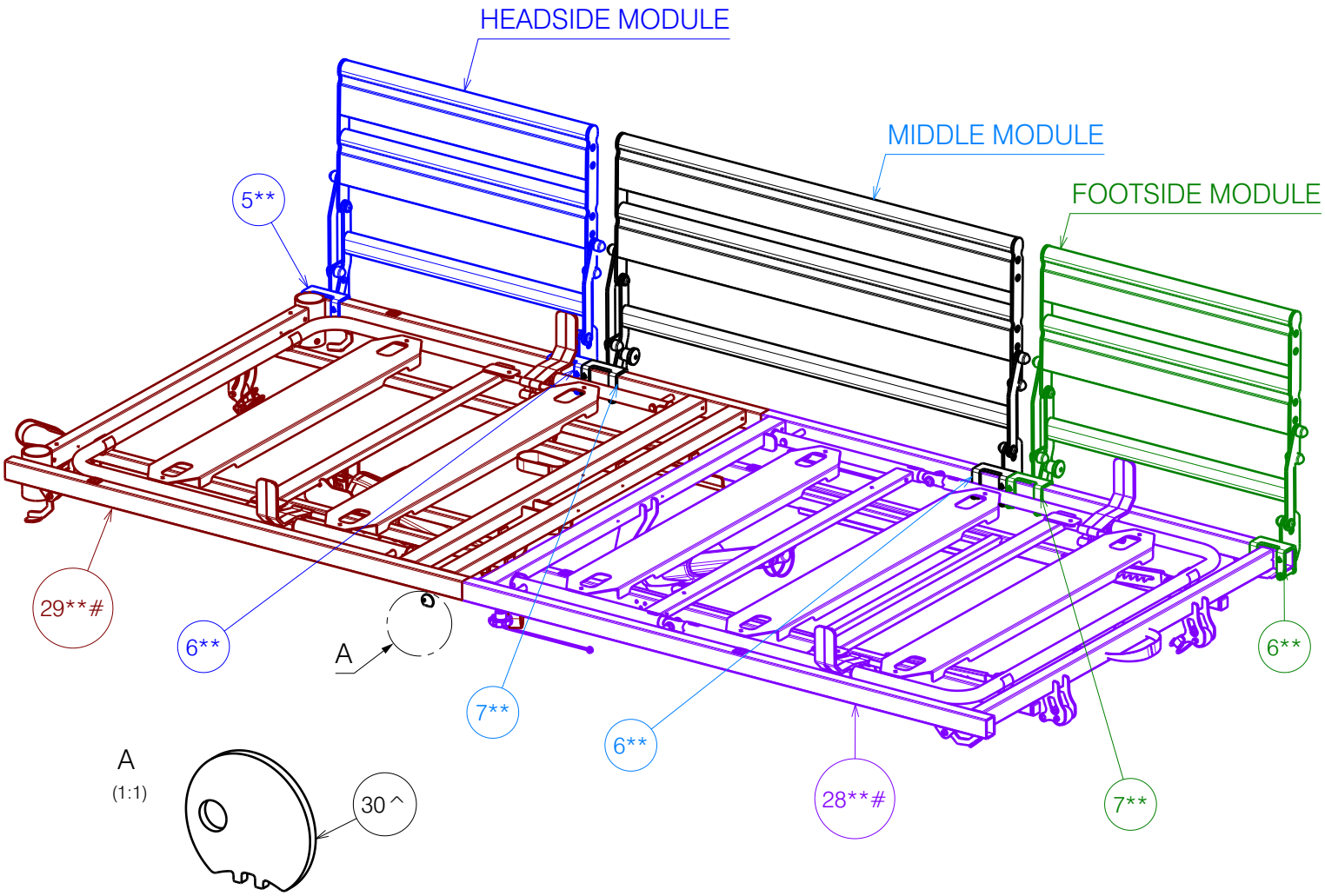

A
(1:1)

No.	Plan	Article	Qty
1*	P00106309 (Beech) P00109050 (Oxide)	2998731 2998733	8 8
2**	P00100978	29099...	4
3**	YP07990	26038...	12
4**	YP08012	26068...	12
5**	YP08013 (L) YP08014 (R)	26039... 26040...	1 1
6**	YP08019	26045...	5
7**	YP08020	26046...	5
8	X001016	1001682	48
9	XP02893	2994748	48
10	XP02894	GP21800	12
11	XP03050	GP23100	48
12	XP03116	GP24700	22
13	XP03232	GP26300	6
14	M10 DIN125	1001557	48
15	M6 DIN985	1001680	22
16	D7x50	2999413	48
17	M8x25 ISO7380	1990501	36
18	M8x25 DIN7991	1995598	12
19	---	---	---
20	Blocker Pin M12x1,5	2994540	6
21	Cap M8 Grey	2994898	48
22	---	---	---
23	M8x8 DIN916/45H	2996665	12
24	M6x40 ISO7380	1006111	22
25***	XP03129	U000430	2
26*	P00117203 (Beech) P00117204 (Oxide)	2992403 2992491	4 4
27**	P00117205	29188...	2
28**#	P00116987_DP	29186...	1
29**#	P00116991_DP	29187...	1
30^	P00114472	2919100	1
31	Sticker	T001090	12

* - to be choosen by customer,
** - the same colour like ordered bed,
*** - not depicted,
# - Use only with Illico SSR. 3SSR, wooden side rails (not for metal side rails).
^ - option

- Quantity of parts are given for set (left and right side),
- Only left head and footsides depicted,
- For assembling and packing use document S-PL.70.01.

NOTICE: THE INFORMATION CONTAINED ON THIS DRAWING IS PROPRIETARY TO VERMEIREN GROUP AND SHALL NOT BE DISCLOSED IN WHOLE OR IN PART, OR USED FOR ANY DESIGN OR MANUFACTURE, EXCEPT WHEN SUCH USER POSSESSES DIRECT WRITTEN AUTHORISATION FROM VERMEIREN GROUP

SPLIT SIDE RAILS 3P / ILLICO 3SSR

Plan No.
E00108327/G.1

Scale: 1:4	Drafted	Verified	Confirmed
Date	26/06/2025	2/10/2026	2/10/2026
Initials	AK	PM	AZ

VERMEIREN