A (1:3)

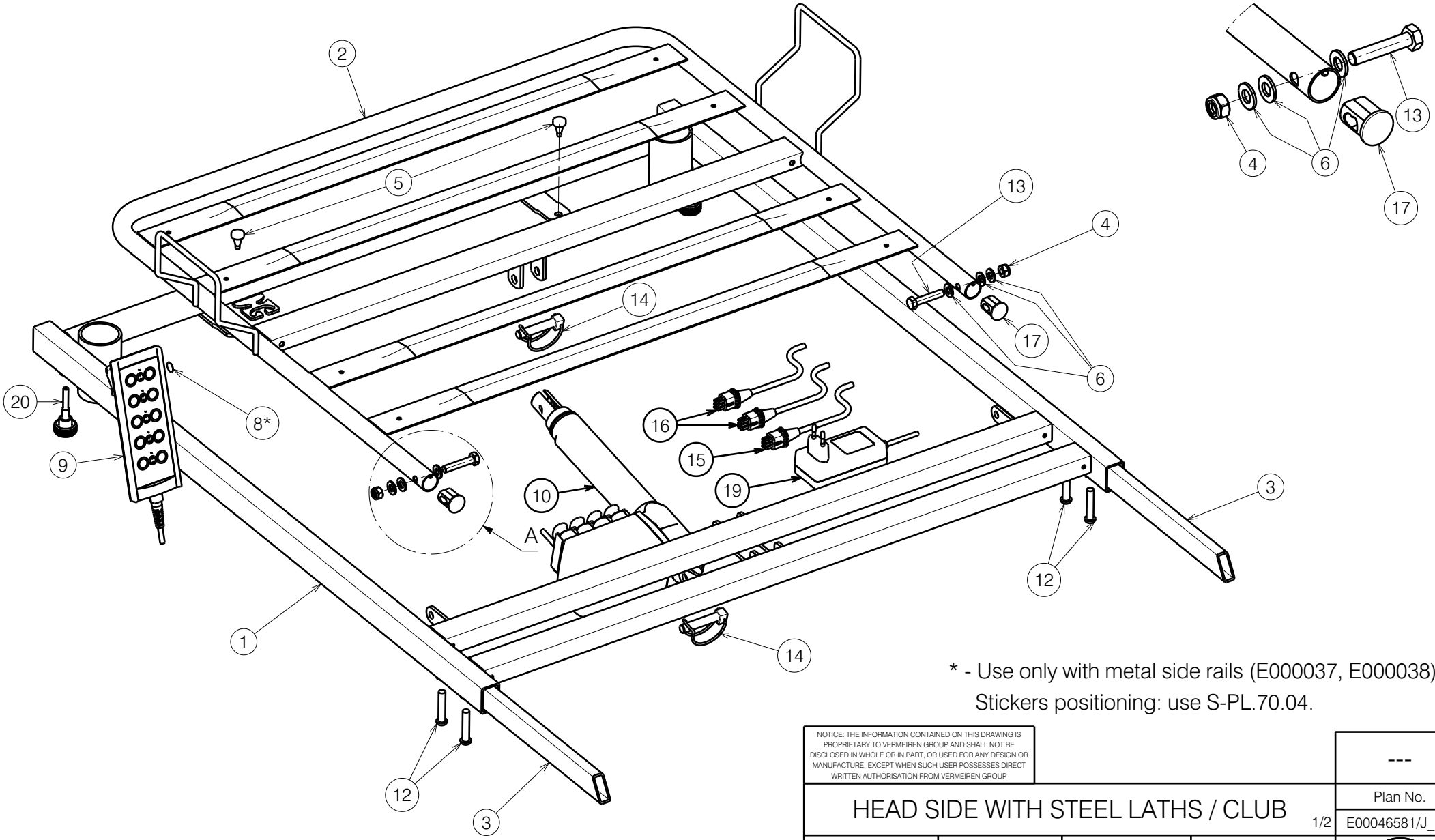

* - Use only with metal side rails (E000037, E000038).
Stickers positioning: use S-PL.70.04.

NOTICE: THE INFORMATION CONTAINED ON THIS DRAWING IS PROPRIETARY TO VERMEIREN GROUP AND SHALL NOT BE DISCLOSED IN WHOLE OR IN PART, OR USED FOR ANY DESIGN OR MANUFACTURE, EXCEPT WHEN SUCH USER POSSESSES DIRECT WRITTEN AUTHORISATION FROM VERMEIREN GROUP

HEAD SIDE WITH STEEL LATHS / CLUB

1/2

Plan No. E00046581/J_1.1

Scale: 1:6	Drafted	Verified	Confirmed
Date	2022-10-27	19/10/2026	19/10/2026
Initials	OY	PM	AZ

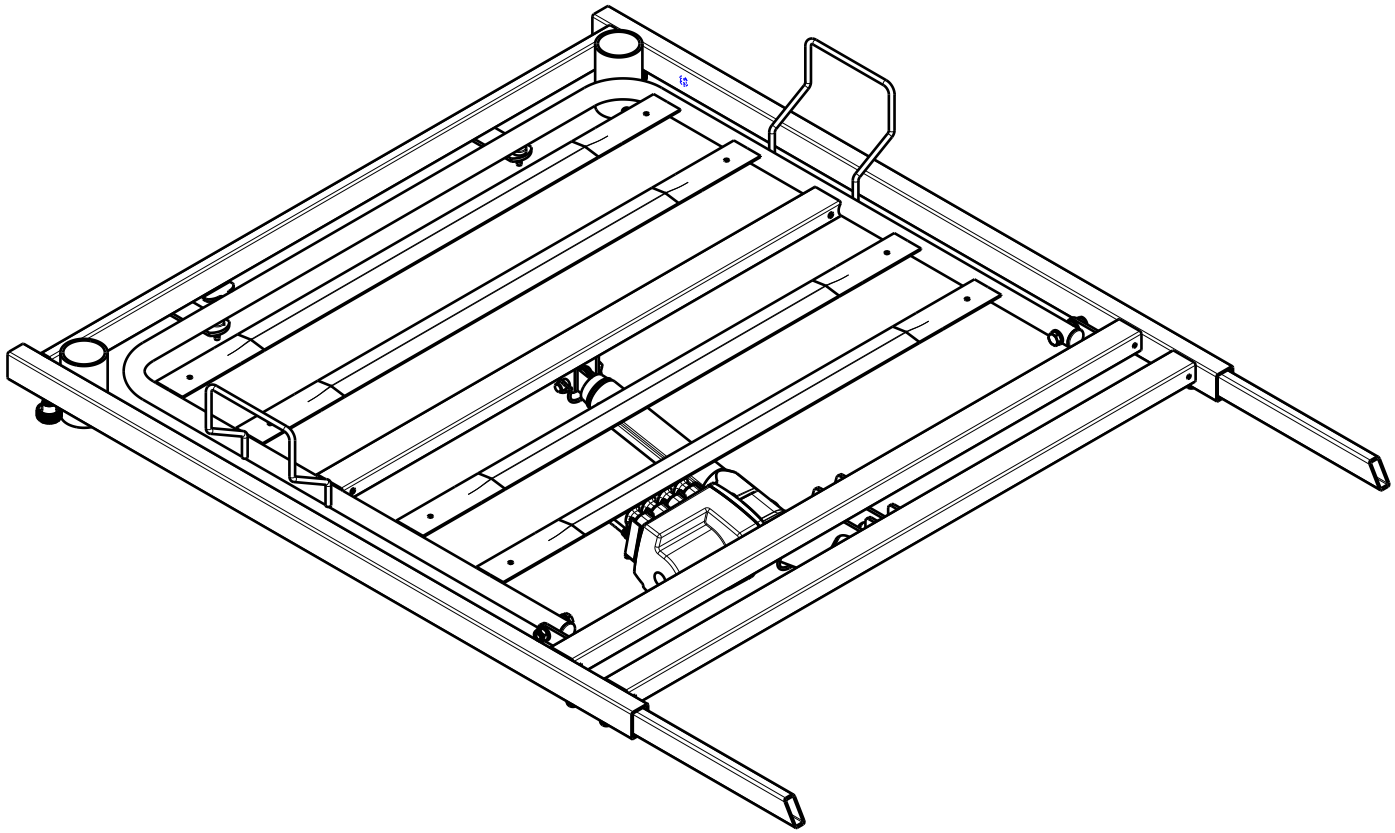

No.	Plan	Article	Qty
1	P00033418 DP	2650237	1
2	YP05099_DP	2899537	1
3	YP08733	2626300	2
4	X001016	1001682	2
5	Distance cap	1001637	2
6	D8,4 DIN125	1003199	6
7**	Cable Lock Release Tool	1924568	1
8*	Arrow Sticker	1903223	2
9	Remote Control	1923917	1
10	Motor LA24ICA	1923472	1
11	---	---	---
12	M8x40 ISO7380	1008739	4
13	M8x40 DIN 931	2993705	2
14	Pen D10x50	1998885	2
15	Panel Cable	1912902	1
16	Panel/Footrest Cable	1919185	2
17	XP02064	2993688	2
18	---	---	---
19	Cable Wall Model Adapter	1923473	1
20	P00058901	2997834	2

** not depicted

* - Use only with metal side rails (E000037, E000038).
Stickers positioning: use S-PL.70.04.

NOTICE: THE INFORMATION CONTAINED ON THIS DRAWING IS PROPRIETARY TO VERMEIREN GROUP AND SHALL NOT BE DISCLOSED IN WHOLE OR IN PART, OR USED FOR ANY DESIGN OR MANUFACTURE, EXCEPT WHEN SUCH USER POSSESSES DIRECT WRITTEN AUTHORISATION FROM VERMEIREN GROUP

HEAD SIDE WITH STEEL LATHS / CLUB

2/2

Plan No. E00046581/J_1.1

Scale: 1:6	Drafted	Verified	Confirmed
Date	2022-10-27	19/10/2026	19/10/2026
Initials	OY	PM	AZ

VERMEIREN