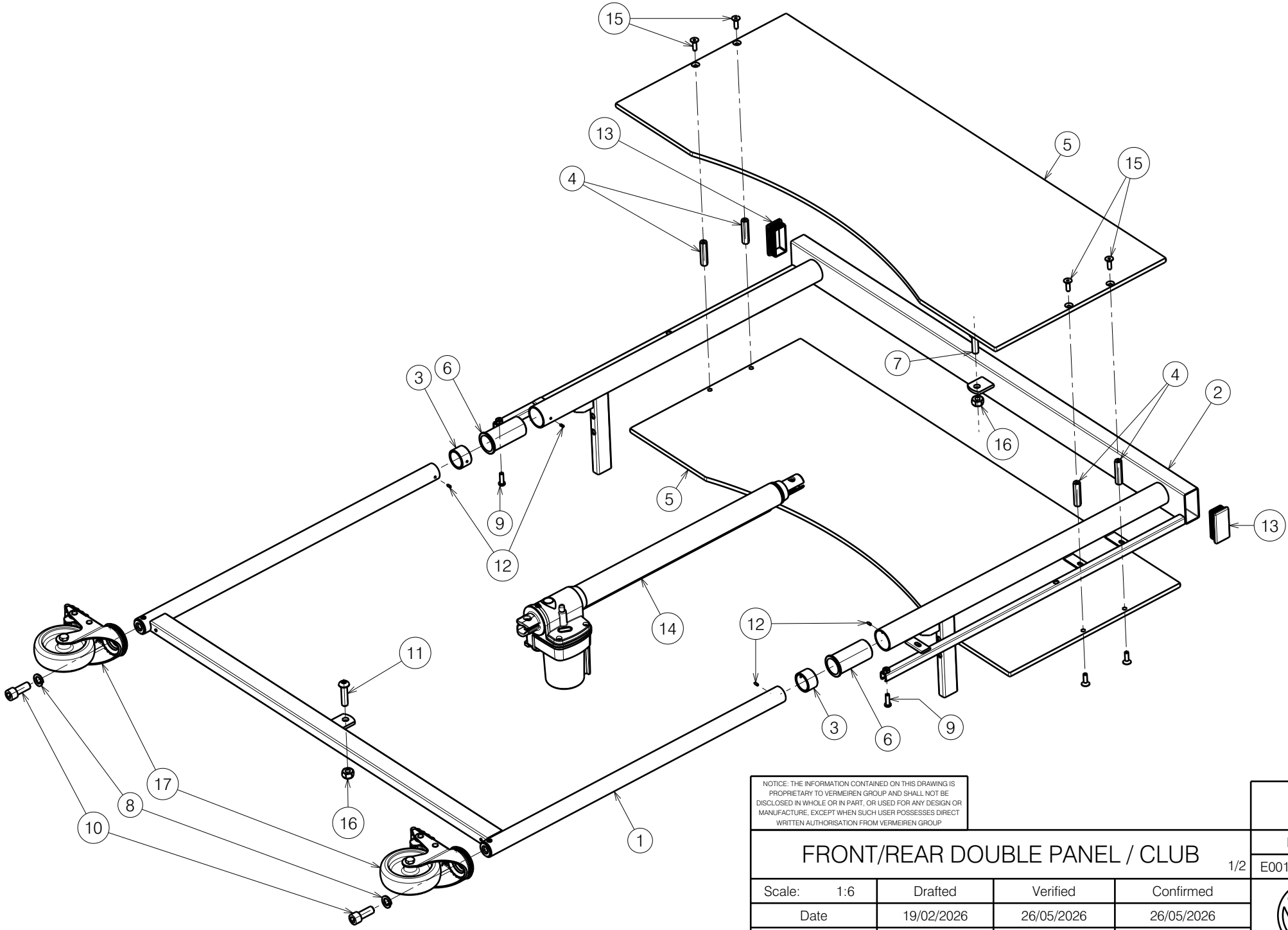

NOTICE: THE INFORMATION CONTAINED ON THIS DRAWING IS PROPRIETARY TO VERMEIREN GROUP AND SHALL NOT BE DISCLOSED IN WHOLE OR IN PART, OR USED FOR ANY DESIGN OR MANUFACTURE, EXCEPT WHEN SUCH USER POSSESSES DIRECT WRITTEN AUTHORISATION FROM VERMEIREN GROUP

FRONT/REAR DOUBLE PANEL / CLUB

1/2

Plan No. E00122433/A1.1

Scale: 1:6	Drafted	Verified	Confirmed
Date	19/02/2026	26/05/2026	26/05/2026
Initials	AZ	KA	AZ

VERMEIREN

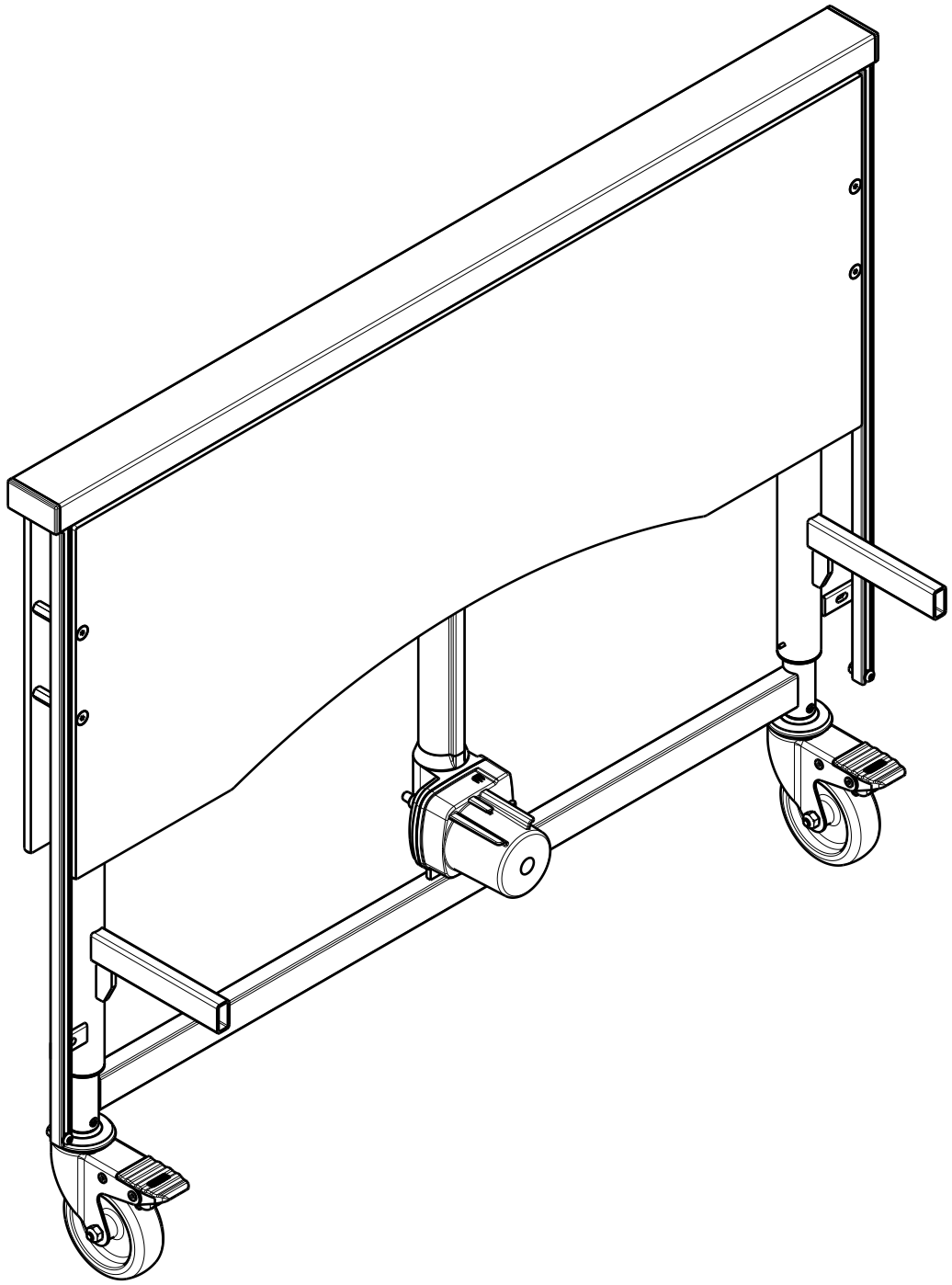

No.	Plan	Article	Qty
1	P00031445	2650437	1
2	P00036728	2650337	1
3	P00038021	2995533	2
4	P00122696	2980018	4
5	P00127888	2980060	2
6	X002822	1995716	2
7	M10x35 ISO7380	1009442	1
8	M12 DIN127A	1001572	2
9	M6x20 ISO7380	1006999	2
10	M12x30 DIN912	1009318	2
11	M10x40 ISO7380	1992592	1
12	3x8mm DIN7343	1993130	4
13	Cap 30x60	2990295	2
14	Motor LA24	1918547	1
15	M6x20 DIN7991	1903081	8
16	M10 DIN985	1001683	2
17	Wheels D100	1001252	2

NOTICE: THE INFORMATION CONTAINED ON THIS DRAWING IS PROPRIETARY TO VERMEIREN GROUP AND SHALL NOT BE DISCLOSED IN WHOLE OR IN PART, OR USED FOR ANY DESIGN OR MANUFACTURE, EXCEPT WHEN SUCH USER POSSESSES DIRECT WRITTEN AUTHORISATION FROM VERMEIREN GROUP

FRONT/REAR DOUBLE PANEL / CLUB

2/2

Plan No.

E00122433/A1.1

Scale: 1:6	Drafted	Verified	Confirmed
Date	19/02/2026	26/06/2026	26/06/2026
Initials	AZ	KA	AZ

VERMEIREN