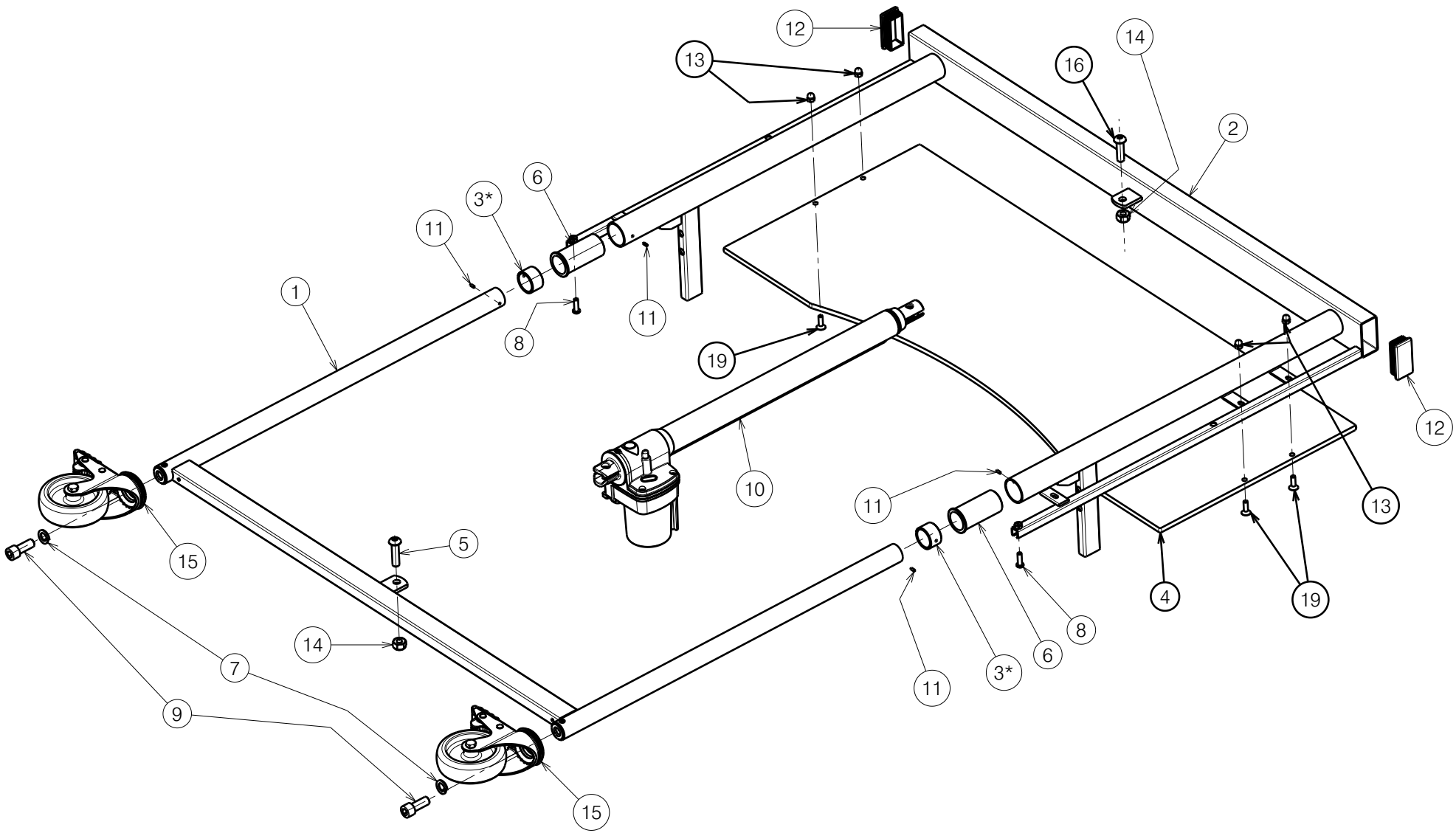

NOTICE: THE INFORMATION CONTAINED ON THIS DRAWING IS PROPRIETARY TO VERMEIREN GROUP AND SHALL NOT BE DISCLOSED IN WHOLE OR IN PART, OR USED FOR ANY DESIGN OR MANUFACTURE, EXCEPT WHEN SUCH USER POSSESSES DIRECT WRITTEN AUTHORISATION FROM VERMEIREN GROUP

FRONT/REAR PANEL CLUB

1/2

Plan No. E00045307/H1.1

Scale: 1:6	Drafted	Verified	Confirmed
Date	2022-10-11	26/06/2026	26/06/2026
Initials	OY	KA	AZ

VERMEIREN

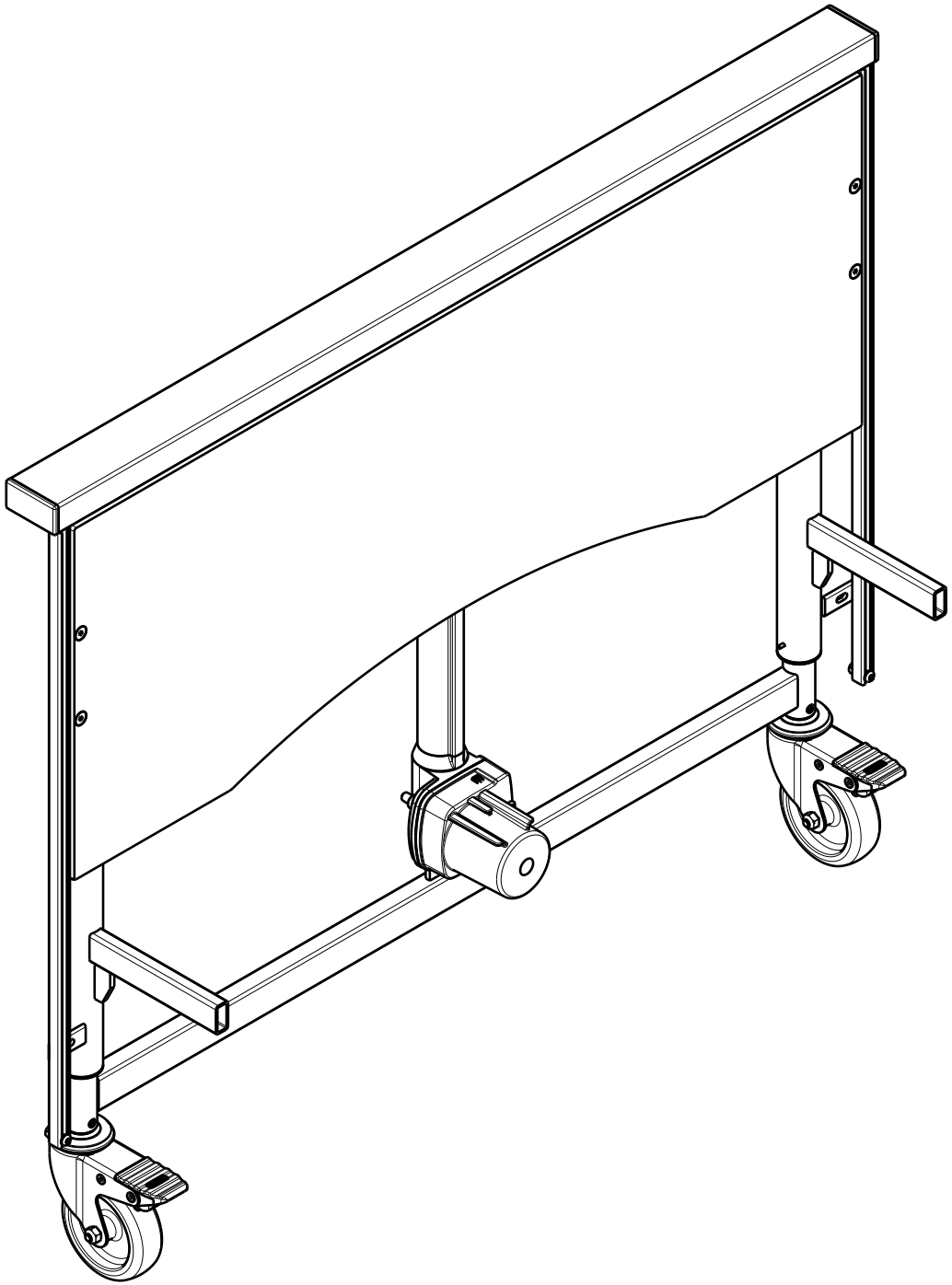

No.	Plan	Article	Qty
1	P00031445	2650437	1
2	P00036728	2650337	1
3*	P00038021 ---*	2995533 1903974*	2 2*
|4	P00127888	2980060	1
5	M10x40 ISO7380	1992592	1
6	X002822	1995716	2
7	M12 DIN127A	1001572	2
8	M6x20 ISO7380	1006999	2
9	M12x30 DIN912	1009318	2
10	Motor LA24	1918547	1
11	3x8 DIN7343	1993130	4
12	Cap 30x60	2990295	2
|13	M6x12	1008492	4
14	M10 DIN985	1001683	2
15	Wheel D100	1001252	2
|16	M10x35 ISO7380	1009442	1
|17	---	---	---
|18	---	---	---
|19	M6x20 DIN7991	1903081	4

* - use to end of stock

NOTICE: THE INFORMATION CONTAINED ON THIS DRAWING IS PROPRIETARY TO VERMEIREN GROUP AND SHALL NOT BE DISCLOSED IN WHOLE OR IN PART, OR USED FOR ANY DESIGN OR MANUFACTURE, EXCEPT WHEN SUCH USER POSSESSES DIRECT WRITTEN AUTHORISATION FROM VERMEIREN GROUP

FRONT/REAR PANEL CLUB

2/2

Plan No.

E00045307/H1.1

Scale: 1:6	Drafted	Verified	Confirmed
Date	2022-10-11	26/06/2026	26/06/2026
Initials	OY	KA	AZ

VERMEIREN