CLUB (Wooden Laths)			
No.	Plan	Article	Qty
1#	EP00268 (Self Raising Aid)	2994167	1
2#	EP00200 (Wooden Bars)	2992993	2
	E000037* (Metal Side Rails Left)	1907123	0,5
	E000038* (Metal Side Rails Right)	1907123	0,5
	E00051321* (Split Side Rails - Wood)	2997565	1
	E00051321* (Split Side Rails - Metal)	2997566	1
3*#	EP00214 (Extension Part Set)	2993198	1
|4	E00045307 (Front/Rear Panel)	2995644	2
5#	E00045904 (Wooden Panel)	2995647	2
|6	E00044910 (Headrest)	2995638	1
7	E00044912 (Footrest)	2995643	1
8*	E00048720 (Vertical transport system)	2995658	1
	E00052584 (Horizontal transport system)	2995842	1
9*#	EP00271 (Serum Holder)	2994093	1
10	Sticker (CLUB logo)	T001200	1
|11*#	E00122433 (Front/Rear Double Panel)	2996459	2

A (1:8)

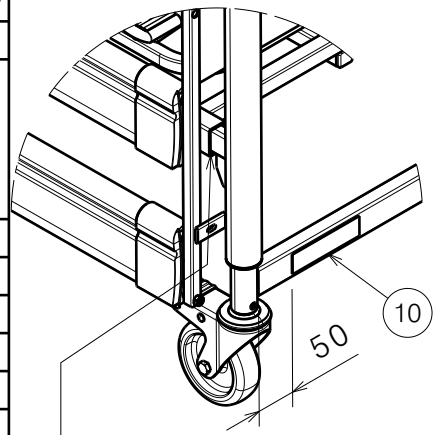

CLUB / no adjustable hight

B (1:8)

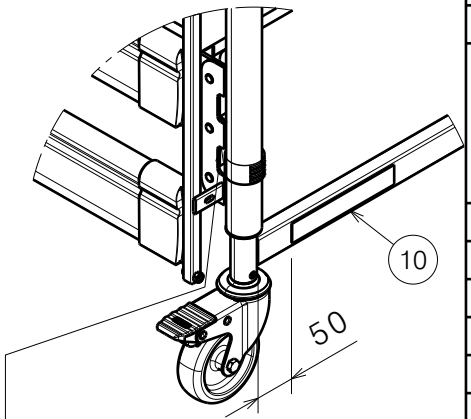

CLUB VARIO / adjustable hight

CLUB VARIO (Wooden Laths)			
No.	Plan	Article	Qty
1#	EP00268 (Self Raising Aid)	2994167	1
2#	EP00200 (Wooden Bars)	2992993	2
	E000037* (Metal Side Rails Left)	1907123	0,5
	E000038* (Metal Side Rails Right)	1907123	0,5
	E00051321* (Split Side Rails - Wood)	2997565	1
	E00051321* (Split Side Rails - Metal)	2997566	1
3*#	EP00214 (Extension Part Set)	2993198	1
|4	E00045757 (Front/Rear Panel)	2995645	2
5#	E00045758 (Wooden Panel)	2995646	2
|6	E00046092 (Headrest)	2995642	1
7	E00045756 (Footrest)	2995639	1
8*	E00048615 (Vertical transport system)	2995659	1
	E00052584 (Horizontal transport system)	2995842	1
9*#	EP00271 (Serum Holder)	2994093	1
10	Sticker (CLUB VARIO logo)	T001202	1
| 11*#	E00122637 (Front/Rear Double Panel)	2997173	2

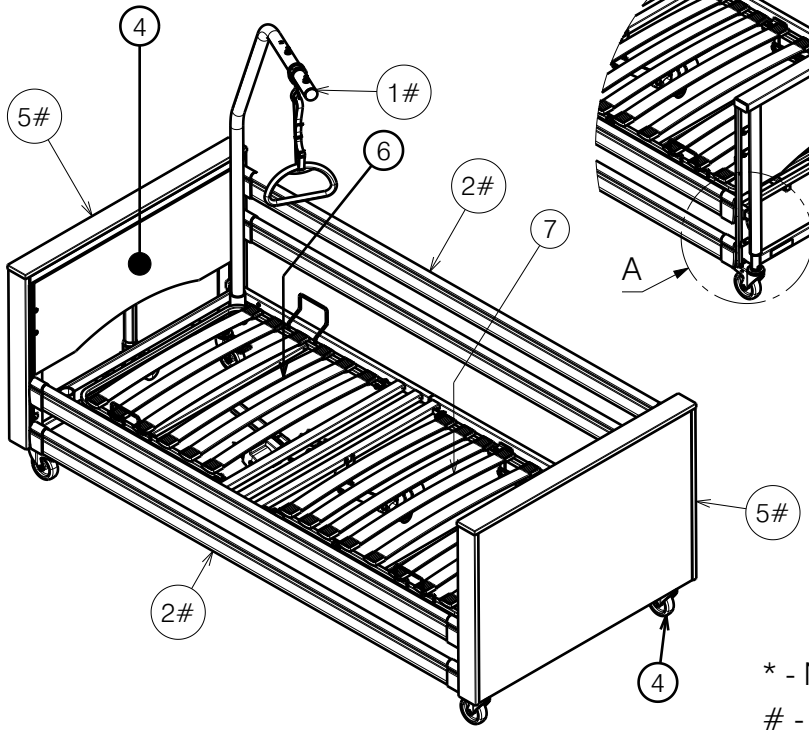

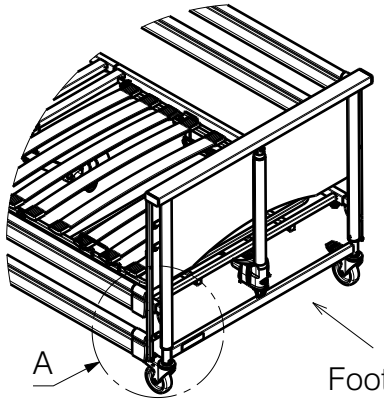

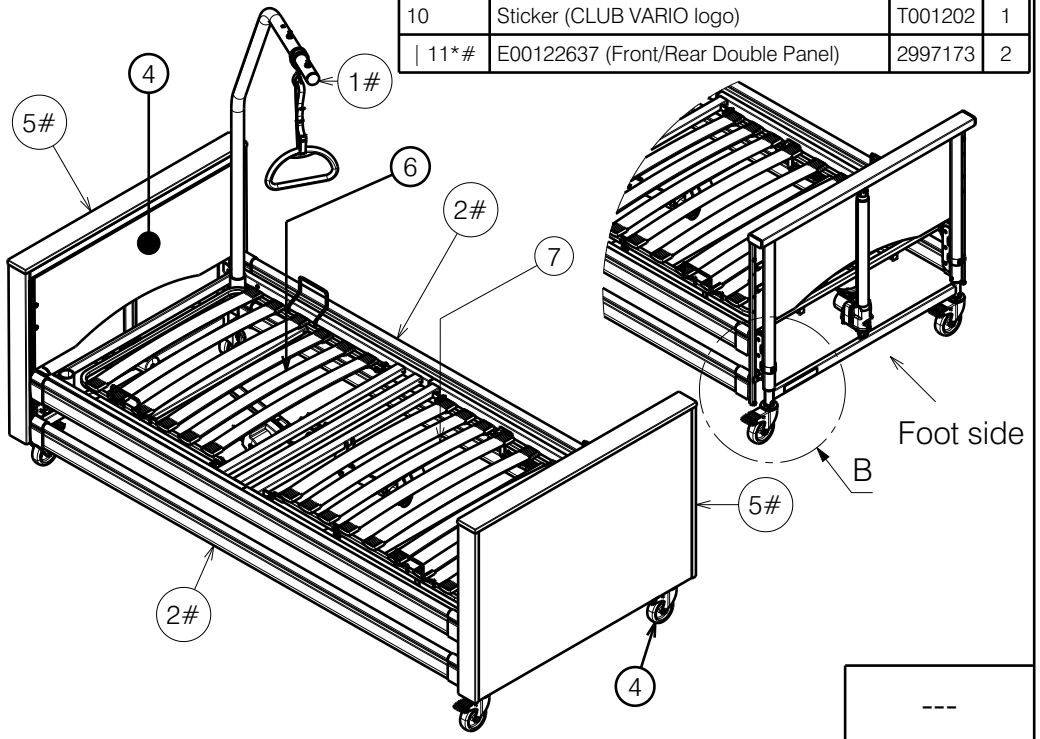

* - Not depicted

\# - Option

SPECIFICATION CLUB / CLUB VARIO				1/2	---
					Plan No.
Scale: 1:25	Drafted	Verified	Confirmed		E00051210/P.1
Date	2023-01-31	26/06/2026	26/06/2026		
Initials	AZ	KA	AZ		

CLUB (Steel Laths)			
No.	Plan	Article	Qty
1#	EP00268 (Self Raising Aid)	2994167	1
2#	EP00200 (Wooden Bars) E000037* (Metal Side Rails Left) E000038* (Metal Side Rails Right) E00051321* (Split Side Rails - Wood) | E00051321* (Split Side Rails - Metal)	2992993 1907123 1907123 2997565 2997566	2 0,5 0,5 1 1
3*#	EP00214 (Extension Part Set)	2993198	1
|4	E00045307 (Front/Rear Panel)	2995644	2
5#	E00045904 (Wooden Panel)	2995647	2
|6	E00046581 (Headrest)	2995636	1
7	E00046582 (Footrest)	2995637	1
8*	E00048720 (Vertical transport system) E00052584 (Horizontal transport system)	2995658 2995842	1 1
9*#	EP00271 (Serum Holder)	2994093	1
10	Sticker (CLUB logo)	T001200	1
|11*#	E00122433 (Front/Rear Double Panel)	2996459	2

C (1:8)

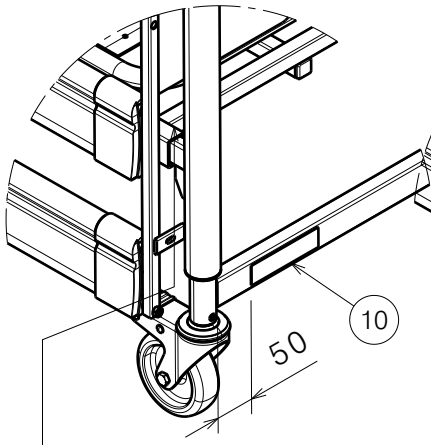

CLUB / no adjustable hight

D (1:8)

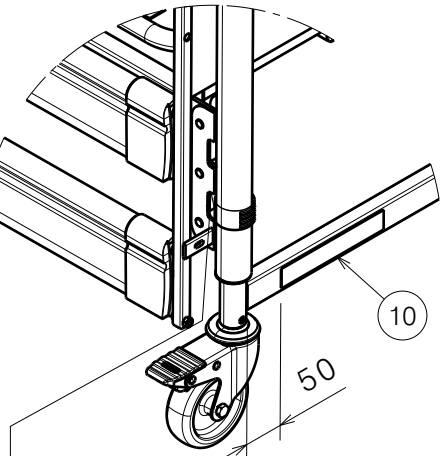

CLUB VARIO / adjustable hight

CLUB VARIO (Steel Laths)			
No.	Plan	Article	Qty
1#	EP00268 (Self Raising Aid)	2994167	1
2#	EP00200 (Wooden Bars) E000037 (Metal Side Rails Left) E000038* (Metal Side Rails Right) E00051321* (Split Side Rails - Wood) | E00051321* (Split Side Rails - Metal)	2992993 1907123 1907123 2997565 2997566	2 0,5 0,5 1 1
3*#	EP00214 (Extension Part Set)	2993198	1
|4	E00045757 (Front/Rear Panel)	2995645	2
5#	E00045758 (Wooden Panel)	2995646	2
|6	E00046540 (Headrest)	2995640	1
7	E00046541 (Footrest)	2995641	1
8*	E00048615 (Vertical transport system) E00052584 (Horizontal transport system)	2995659 2995842	1 1
9*#	EP00271 (Serum Holder)	2994093	1
10	Sticker (CLUB VARIO logo)	T001202	1
|11*#	E00122637 (Front/Rear Double Panel)	2997173	2

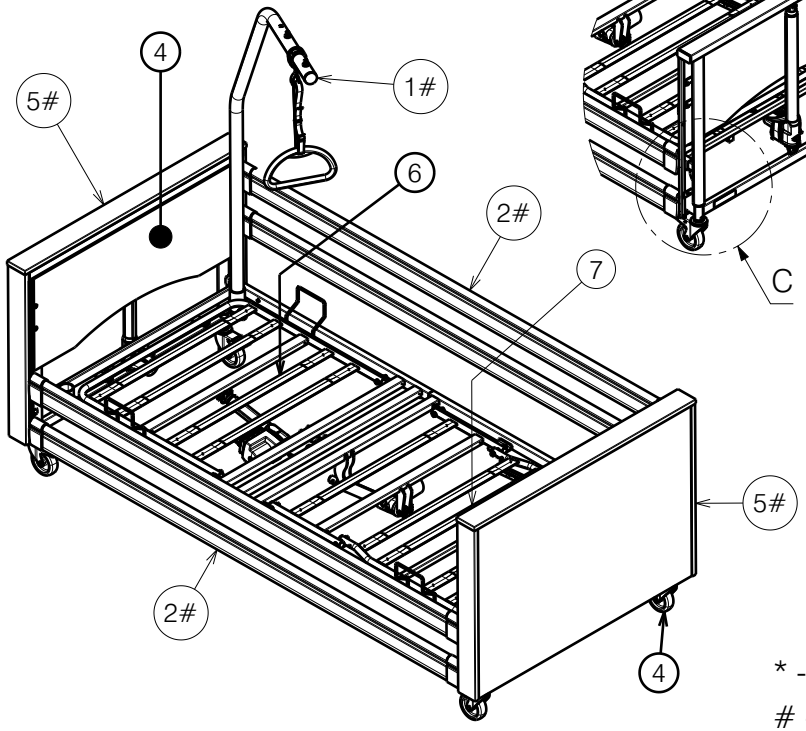

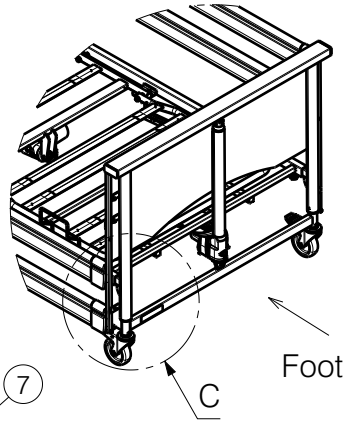

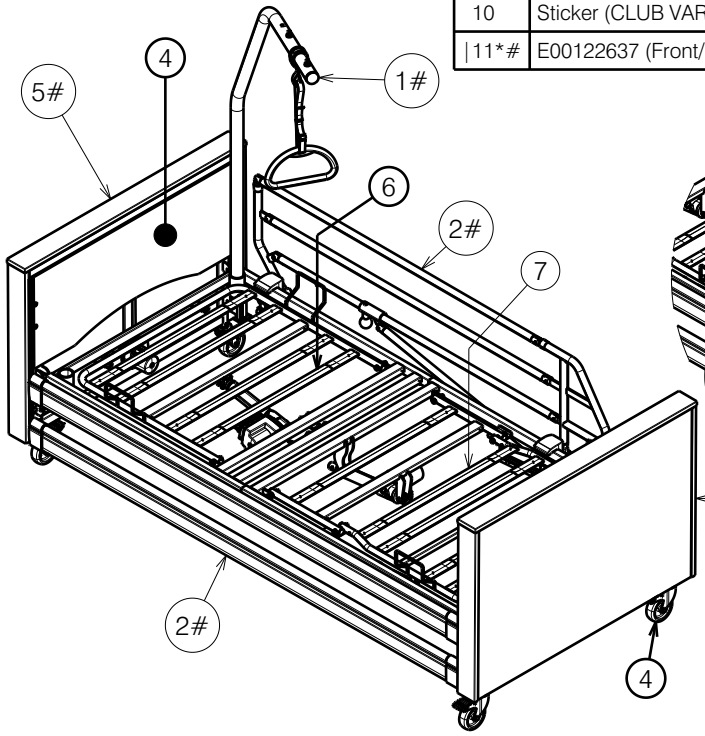

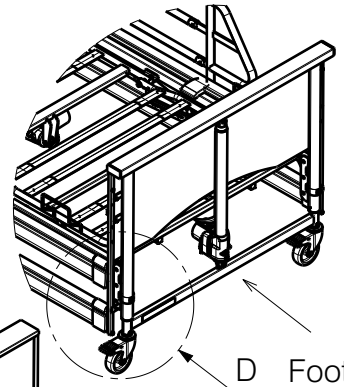

* - Not depicted

\# - Option

SPECIFICATION CLUB / CLUB VARIO			2/2	---
				Plan No.
				E00051210/P.1
Scale: 1:25	Drafted	Verified	Confirmed	VERMEIREN
Date	2023-01-31	26/06/2026	26/06/2026	
Initials	AZ	KA	AZ	