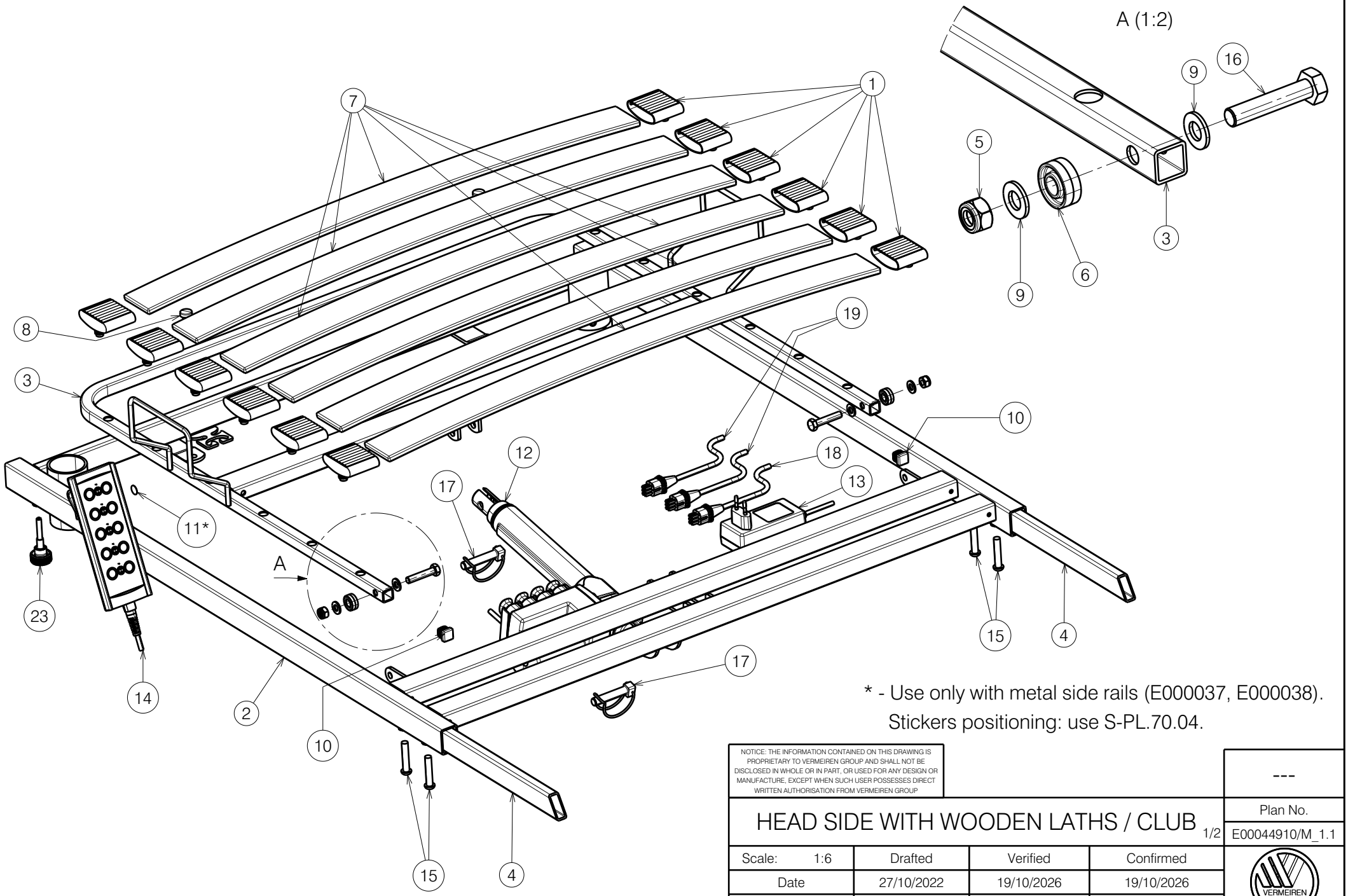

* - Use only with metal side rails (E000037, E000038).
Stickers positioning: use S-PL.70.04.

NOTICE: THE INFORMATION CONTAINED ON THIS DRAWING IS PROPRIETARY TO VERMEIREN GROUP AND SHALL NOT BE DISCLOSED IN WHOLE OR IN PART, OR USED FOR ANY DESIGN OR MANUFACTURE, EXCEPT WHEN SUCH USER POSSESSES DIRECT WRITTEN AUTHORISATION FROM VERMEIREN GROUP

HEAD SIDE WITH WOODEN LATHS / CLUB 1/2

Plan No. E00044910/M_1.1

Scale: 1:6	Drafted	Verified	Confirmed
Date	27/10/2022	19/10/2026	19/10/2026
Initials	OY	PM	AZ

No.	Plan	Article	Qty
1	P00033167	2995472	12
2	P00033418 DP	2650237	1
3	P00033422	2650137	1
4	YP08733	2626300	2
5	X001016	1001682	2
6	X002480	1993793	2
7	XP01421	2993116	6
8	Distance cap	1001637	2
9	D8,4 DIN125	1003199	4
10	Cap 15x15	1005899	2
11*	Arrow sticker	1903223	2
12	Motor LA24ICA	1923472	1
13	Cable Wall Model Adapter	1923473	1
14	Remote Control	1923917	1
15	M8x40 ISO 7380	1008739	4
16	M8x40 DIN931	2993705	2
17	Pen D10x50	1998885	2
18	Panel Cable	1912902	1
19	Panel/Footrest Cable	1919185	2
20**	Cable Lock Release Tool	1924568	1
21	---	---	---
22	---	---	---
23	P00058901	2997834	2

** not depicted

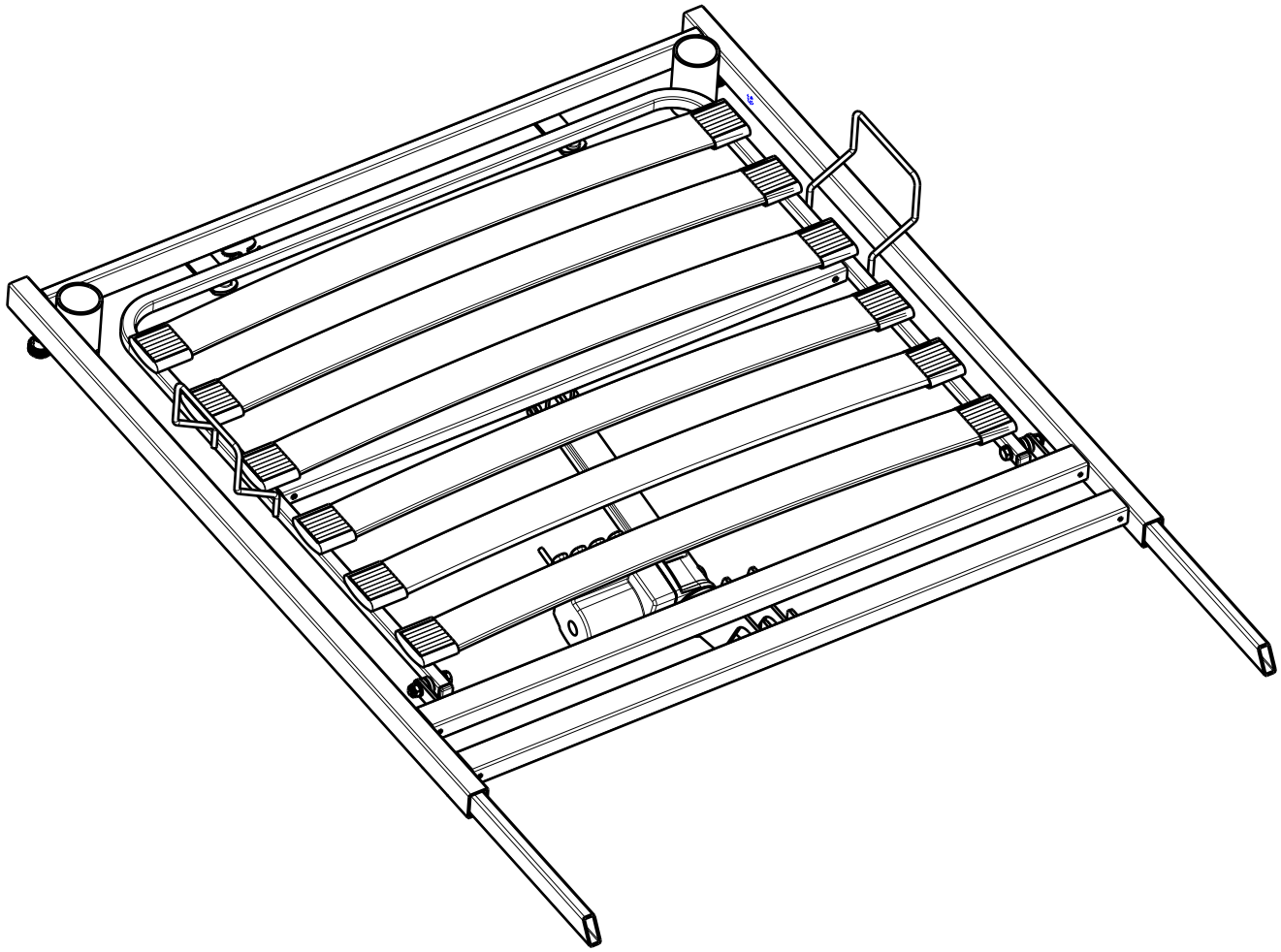

* - Use only with metal side rails (E000037, E000038).
Stickers positioning: use S-PL.70.04.

NOTICE: THE INFORMATION CONTAINED ON THIS DRAWING IS PROPRIETARY TO VERMEIREN GROUP AND SHALL NOT BE DISCLOSED IN WHOLE OR IN PART, OR USED FOR ANY DESIGN OR MANUFACTURE, EXCEPT WHEN SUCH USER POSSESSES DIRECT WRITTEN AUTHORISATION FROM VERMEIREN GROUP

HEAD SIDE WITH WOODEN LATHS / CLUB 2/2

Plan No. E00044910/M_1.1

Scale: 1:6	Drafted	Verified	Confirmed
Date	27/10/2022	19/10/2026	19/10/2026
Initials	OY	PM	AZ

VERMEIREN