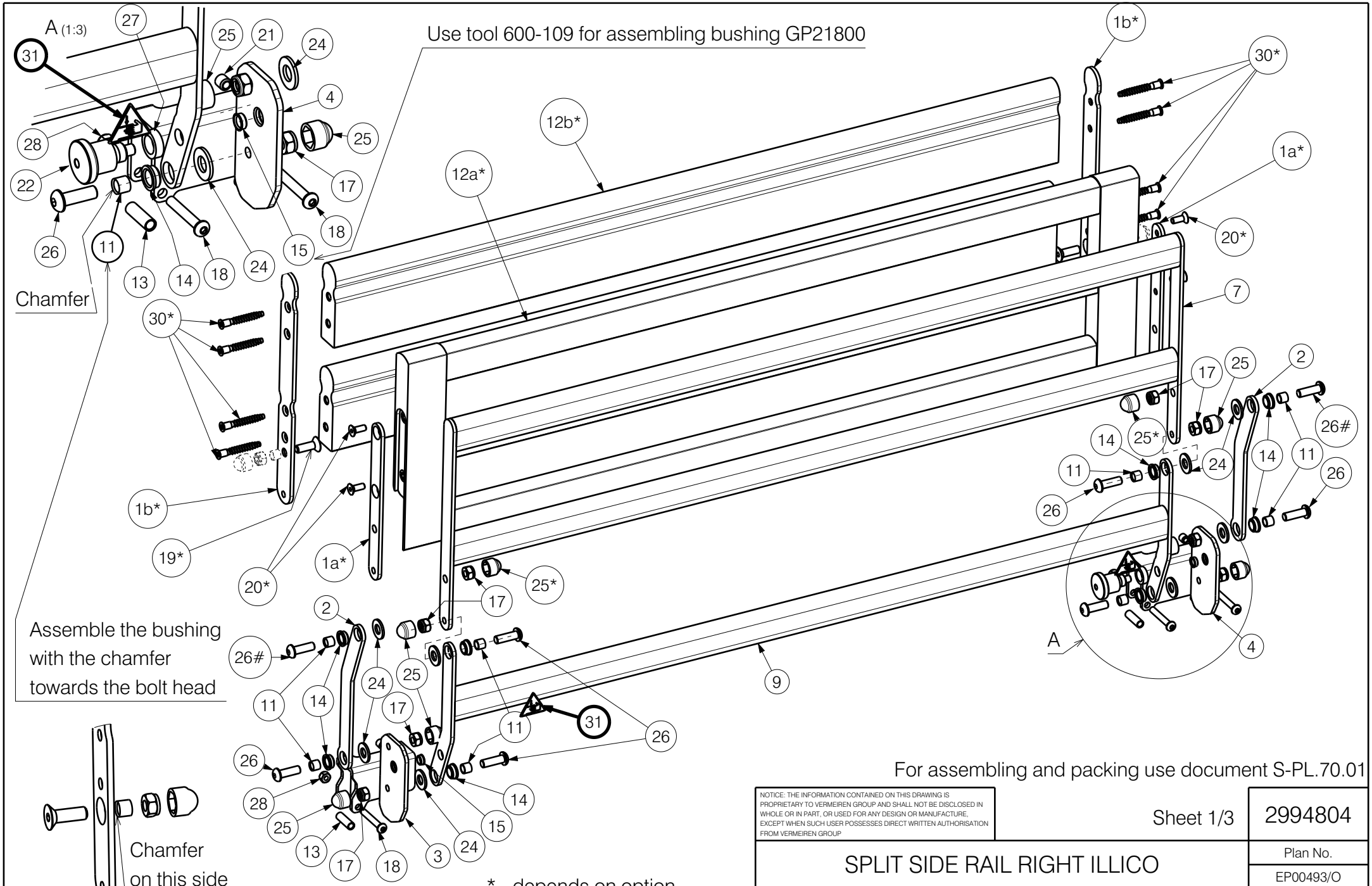

For assembling and packing use document S-PL.70.01

NOTICE: THE INFORMATION CONTAINED ON THIS DRAWING IS PROPRIETARY TO VERMEIREN GROUP AND SHALL NOT BE DISCLOSED IN WHOLE OR IN PART, OR USED FOR ANY DESIGN OR MANUFACTURE, EXCEPT WHEN SUCH USER POSSESSES DIRECT WRITTEN AUTHORISATION FROM VERMEIREN GROUP

Sheet 1/3

2994804

SPLIT SIDE RAIL RIGHT ILLICO

Plan No. EP00493/O

Scale: 1:5	Drafted	Verified	Confirmed
Date	17/02/2020	2/10/2026	2/10/2026
Initials	DR	PM	AZ

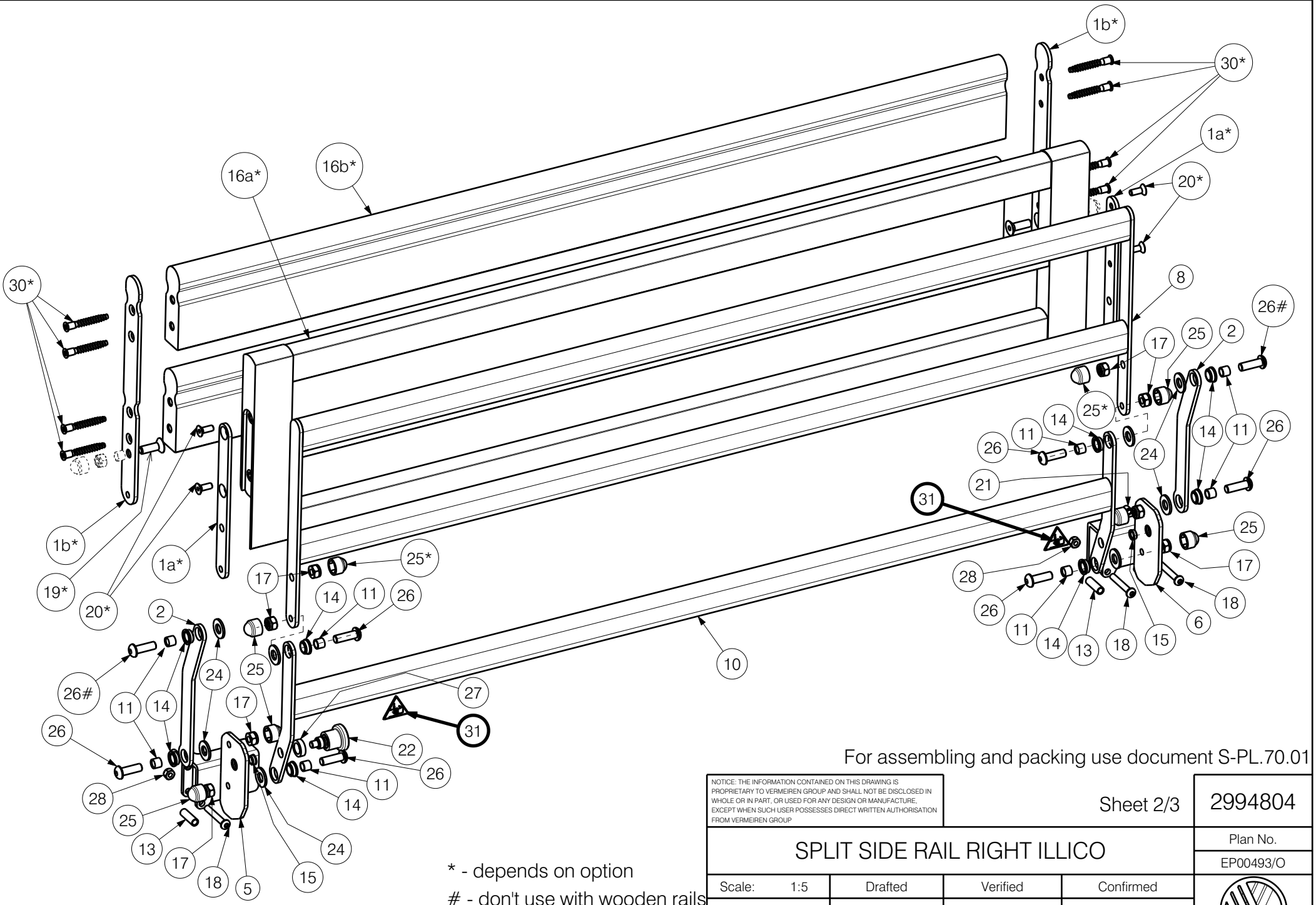

For assembling and packing use document S-PL.70.01

NOTICE: THE INFORMATION CONTAINED ON THIS DRAWING IS PROPRIETARY TO VERMEIREN GROUP AND SHALL NOT BE DISCLOSED IN WHOLE OR IN PART, OR USED FOR ANY DESIGN OR MANUFACTURE, EXCEPT WHEN SUCH USER POSSESSES DIRECT WRITTEN AUTHORISATION FROM VERMEIREN GROUP

Sheet 2/3

2994804

SPLIT SIDE RAIL RIGHT ILLICO

Plan No. EP00493/O

Scale: 1:5	Drafted	Verified	Confirmed
Date	17/02/2020	2/10/2026	2/10/2026
Initials	DR	PM	AZ

* - depends on option

\# - don't use with wooden rails
Right footside depicted

Material			
No.	Plan	Article	Quantity
1a*	YP07984	26037...	8
1b*	YP08012	26068...	8
2	YP07990	26038...	8
3	YP08013	26039... (L)	1
	YP08014	26040... (R)	1
4	YP08015	26041... (L)	1
	YP08016	26042... (R)	1
5	YP08017	26043... (L)	1
	YP08018	26044... (R)	1
6	YP08019	26045... (L)	1
	YP08020	26046... (R)	1
7	YP08021	26047...	2
8	YP08022	26048...	2
9	YP08023	26049...	2
10	YP08024	26050...	2
11	XP03050	GP23100	32
12a*	XP02891	HP00634 (beech)	2
	XP02931	HP00643 (bl. oak)	2
	XP03039	HP00667 (nat. oak)	2
	XP03040	HP00668 (wen. oak)	2
	XP03041	HP00669 (wal. oak)	2
12b*	XP02902	HP00641 (oxide)	4
	XP03197	HP00695 (beech)	4
13	XP03116	GP24700	12
14	XP02893	2994748	32
15	XP02894	GP21800	8
16a*	XP02895	HP00637 (beech)	2
	XP02932	HP00644 (bl. oak)	2
	XP03042	HP00670 (nat. oak)	2
	XP03043	HP00671 (wen. oak)	2
	XP03044	HP00672 (wal. oak)	2
16b*	XP02903	HP00642 (oxide)	4
	XP03198	HP00696 (beech)	4

Material			
No.	Plan	Article	Quantity
17*	Nut M8 Selflocking	1001682	32
18	M6x40	1006111	12
19*	M8x25 DIN7991	1995598	8
20*	M6x16 DIN7991	1994752	16
21	M8x8 DIN916	2996665	8
22	Blocker pin M12	2994540	4
23*	---	---	---
24	Washer M10 PVC	1001557	32
25*	Nut cap M8 grey	2994898	32
26	M8x25	1990501	32/24*
27	XP03232	GP26300	4
28	Nut M6 Selflocking	1001680	12
29**	XP03129 box	U000430	1
30*	D7x50	2999413	32
31	Sticker	T001090	8

* - depends on option

** - not depicted

For assembling and packing use document S-PL.70.01

NOTICE: THE INFORMATION CONTAINED ON THIS DRAWING IS PROPRIETARY TO VERMEIREN GROUP AND SHALL NOT BE DISCLOSED IN WHOLE OR IN PART, OR USED FOR ANY DESIGN OR MANUFACTURE, EXCEPT WHEN SUCH USER POSSESSES DIRECT WRITTEN AUTHORISATION FROM VERMEIREN GROUP

Sheet 3/3

2994804

SPLIT SIDE RAIL RIGHT ILLICO

Plan No.

EP00493/O

Scale: 1:5	Drafted	Verified	Confirmed
Date	17/02/2020	2/10/2026	2/10/2026
Initials	DR	PM	AZ

VERMEIREN